# EXPERIMENT NO. 4

# MODE CHARACTERISTICS OF REFLEX KLYSTRON

**AIM:** To study the characteristics of the Reflex Klystron Tube and to determine its electronic tuning range. (For NV 9000).

**APPARATUS:** Klystron Power Supply, Klystron tube with Klystron mounts, Isolator, Frequency meter, Variable attenuator, Detector mount, Wave guide stand, Oscilloscope, BNC cable.

## THEORY:

The Reflex Klystron makes the use of velocity modulation to transform a continuous electron beam into microwave power. Electrons emitted from the cathode are accelerated & passed through the positive resonator towards negative reflector, which retards and finally, reflects the electrons and the electrons turn back through the resonator. Suppose an rf-field exists between the resonators the electrons traveling forward will be accelerated or retarded, as the voltage at the resonator changes in amplitude.

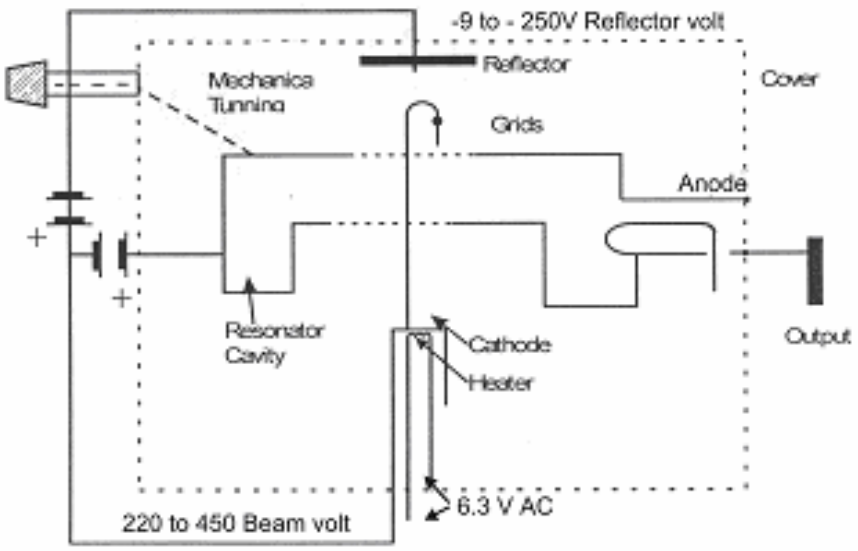


Figure 1. Schematic Diagram of Klystron 2K25

The accelerated electrons leave the resonator at an increased velocity and the retarded electrons leave at the reduced velocity. The elect ns leaving the resonator will need different time to return, due to change in velocities. As a result, returning electrons group together in bunches, as

the electron bunches pass through resonator, they interact with voltage at resonator grids. If the bunches pass the grid at such a time that the electrons are slowed down by the voltage then energy will be delivered to the resonator; and Klystron will oscillate. Fig. shows the relationship between output power, frequency and reflector voltages.

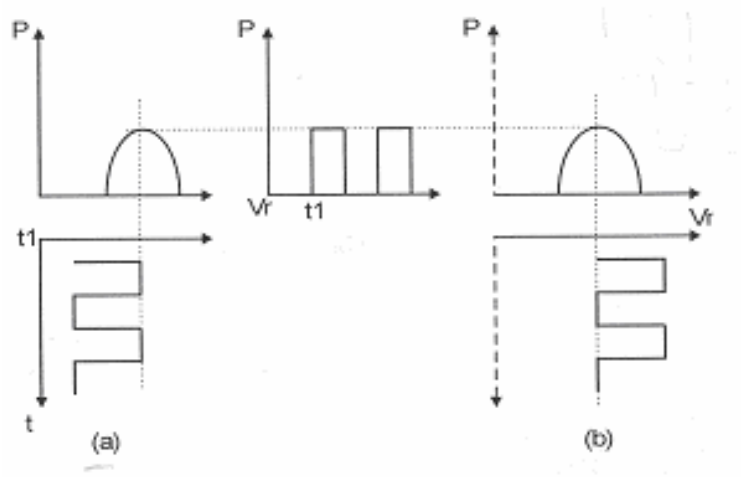


Figure 2. Square wave modulation of the Klystron

The frequency is primarily determined by the dimensions of resonant cavity. Hence, by changing the volume of resonator, mechanical tuning of klystron is possible. Also, a small frequency change can be obtained by adjusting the reflector voltage. This is called Electronic Tuning

**PROCEDURE:**

**Part I:**

1. Connect the equipment and components as shown in the figure

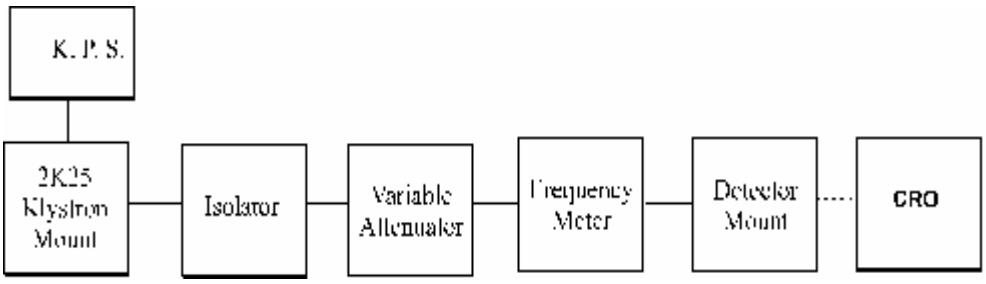


Figure 3. Experiment setup to find mode characteristics of Reflex Klystron

2. Set the micrometer of variable attenuator for no attenuation
3. Now in KPS set Mode select switch to AM- MOD position. Beam voltage control knob to fully anticlockwise position. Reflector voltage control knob to the maximum clockwise position.
4. Switch 'On' the Klystron Power Supply, CRO and cooling fan.

5. Change the beam voltage knob clockwise up to 250V and observe the corresponding beam current for a beam voltage of 250 Volts.

6. Keep the AM amplitude knob and AM frequency knob at the mid-position.
7. Slowly change the value of repeller voltage in steps of 5 Volts and observe and record the values of corresponding detected output on the CRO.
8. For each value of the repeller voltage note down frequency by tuning the frequency meter and observing a dip on the CRO. (Remember to detune the frequency Meter after noting the reading.
9. Plot the readings obtained.

**Part II: Mode Study on Oscilloscope:**

1. Set up the components and equipment as shown in figure .

2. Set Mode selector switch to AM-Mode position with AM amplitude and AM frequency knob at mid position. Keep beam voltage control k n o b fully anticlockwise and reflector voltage knob to fully clockwise.

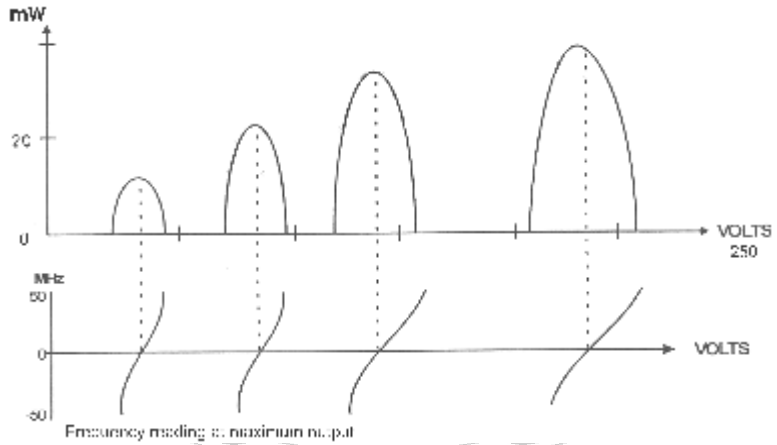


Figure 4. Voltage and Frequency Mode characteristics of Reflex Klystron 2k25

3. Keep the time/division scale of Oscilloscope around 100Hz frequency measurement and volt/ div to lower scale.
4. Switch 'On' the klystron power supply and oscilloscope.
5. Set beam voltage to 300V by beam voltage control knob.
6. Keep amplitude knob of FM modulator to maximum position and rotate the reflector voltage anti-clockwise to get modes as shown in figure 8 on the oscilloscope. The horizontal axis represents reflector voltage axis, and vertical axis represents output power.
7. By changing the reflector voltage and amplitude of FM modulation, any mode of Klystron tube can be seen on an Oscilloscope.

**<u>OBSERVATIONS:</u>**

| Sr. No. | Repeller voltage (in Volts) | Output voltage (in mV) | Frequency (in GHz) |
|---|---|---|---|
| | | | |

| | | | |
|---|---|---|---|
| | | | |
| | | | |
| | | | |
| | | | |
| | | | |
| | | | |
| | | | |
| | | | |

**CALCULATIONS:**

**To find Electronic Tuning Sensitivity (E.T.S):**

$$E.T.S. = \frac{f_2 - f_1}{V_2 - V_1}$$

**RESULTS AND CONCLUSIONS:**

**QUESTIONS:**

Q.1 How many cavity Reflex Klystron does have?
Q.2 On which principle Klystron tube operates?
Q.3 What are the applications of reflex klystron.
Q.4 On what principle multi cavity klystron Amp$^{r.}$ Works?
Q.5 What are different modes in a reflex Klystron?
Q.6 The Secondary cavity in a two-cavity klystron is called?
Q.7 What is the efficiency of Reflex Klystron?
Q.8 The single cavity in Reflex Klystron is acts as?
Q.9 What should be the transit time?
Q.10 Why negative voltage is given to the Repeller?

**ANSWERS:**

PROGRESS SOCIETY * Pune - 5 * Modern College of Engineering * Pune - 5 *